OPTIONAL PARTS

Restrictors

Alternative restrictor sizes for different carrier oil flows.

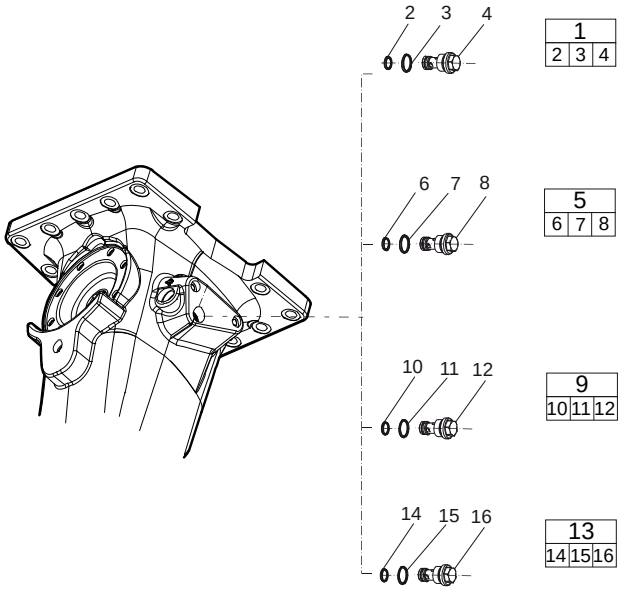

Parts list

REF	PART NO.	DESCRIPTION	QTY	NOTES
1	3315369635	Restrictor	1	Complete; includes 2, 3 and 4
2	0663210421	O-Ring	1	
3	0663212141	O-Ring	1	
4	—	Restrictor	1	Not sold separately; part of 1. Ø 6.0 mm (Ø 0.24 in.)
5	3315369645	Restrictor	1	Complete; includes 6, 7 and 8
6	0663210421	O-Ring	1	
7	0663212141	O-Ring	1	
8	—	Restrictor	1	Not sold separately; part of 5. Ø 6.7 mm (Ø 0.26 in.)

REF	PART NO.	DESCRIPTION	QTY	NOTES
9	3315369655	Restrictor	1	Complete; includes 10, 11 and 12
10	9125621100	O-Ring	1	
11	0663210421	O-Ring	1	
12	—	Restrictor	1	Not sold separately; part of 9. 7.7 mm (0.30 in.)
13	3315369691	Restrictor	1	Complete; includes 14, 15 and 16
14	0663210421	O-Ring	1	
15	9125621100	O-Ring	1	
16	—	Restrictor	1	Not sold separately; part of 13. 9.1 mm (0.36 in.)