SERVICE KIT

Seal Kit

Numbers match the callouts in the drawing and on the breaker parts diagram.

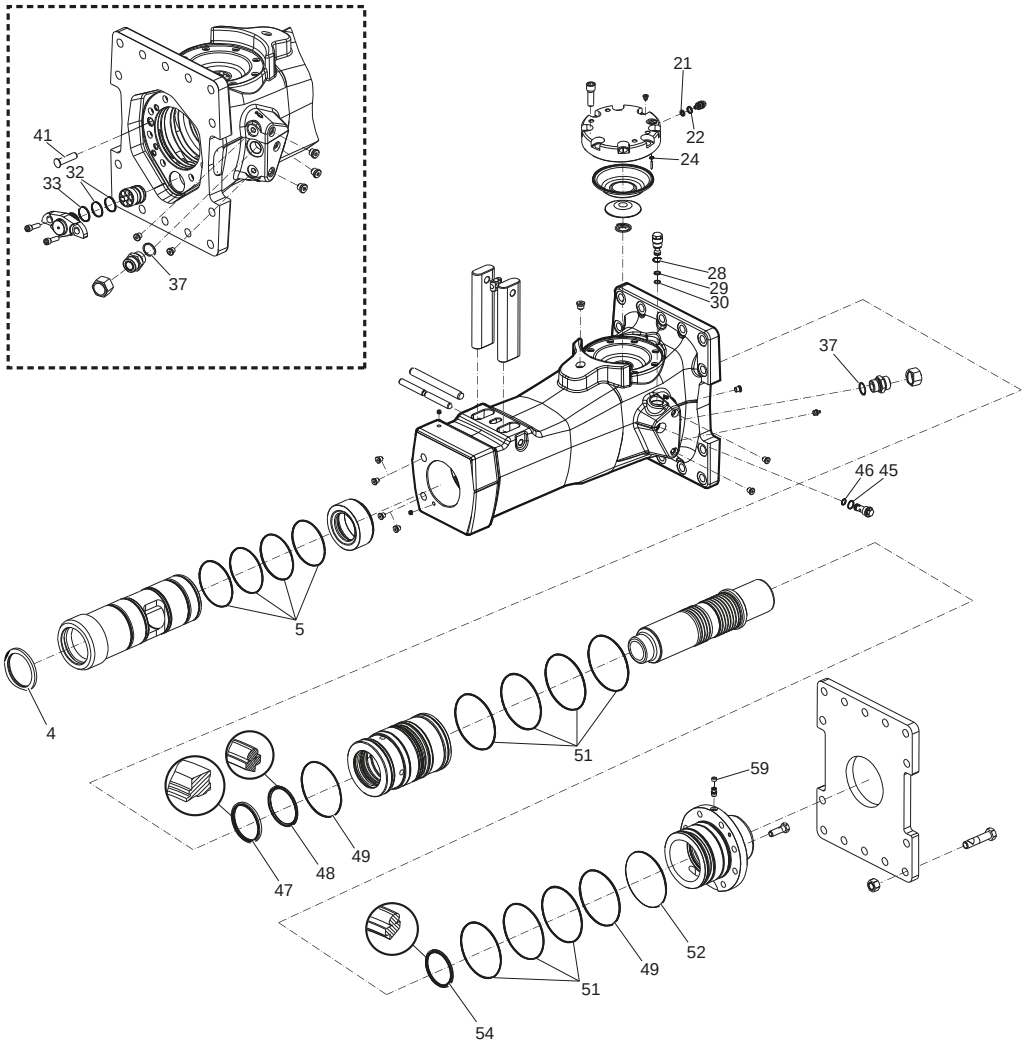

Seal Kit Epiroc part number **3315303690** Crowder SKU EP-3315303690

Kit contents

REF	PART NO.	DESCRIPTION	QTY	NOTES
4	3315303000	Scraper Ring	1	
5	0663210823	O-Ring	4	
21	3115329002	Seal Ring	1	
22	0663212000	O-Ring	1	
24	0663211400	O-Ring	1	
28	9125621100	O-Ring	1	
29	0663210421	O-Ring	1	
30	0661200401	Back-Up Ring	1	
32	0663990026	Seal Ring	2	
33	0663211491	O-Ring	1	
37	0664000005	Seal Ring	1	

REF	PART NO.	DESCRIPTION	QTY	NOTES
41	3315336700	Plug	1	
45	0663210421	O-Ring	1	
46	9125621100	O-Ring	1	
47	0665909965	Wiper	1	
48	0665070134	Piston Rod Seal	1	
49	0663990027	Seal Ring	2	
51	0663211303	O-Ring	7	
52	0663211506	O-Ring	1	
54	0665070133	Piston Rod Seal	1	
59	3315280800	Valve Rubber	1	