SERVICE DATA

Tightening torques

Ref numbers match the drawing.

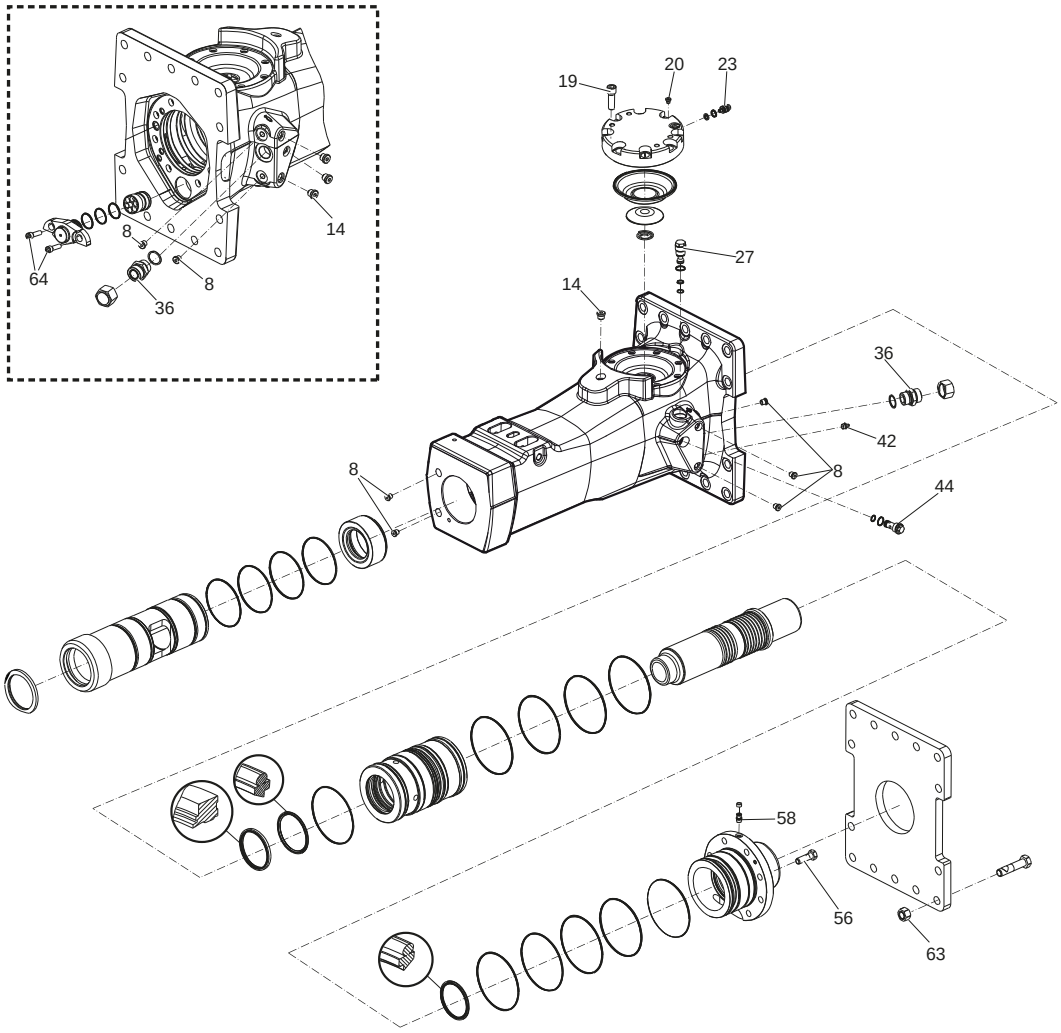

Tightening torques

REF	PART NO.	DESCRIPTION	TORQUE	NOTES
8	0686644207	Plug	30 Nm (22 ft lbf)	LOCTITE® 243™
14	0686371801	Plug	80 Nm (59 ft lbf)	LOCTITE® 243™
19	0211196544	Hex Socket Screw	300 Nm (221 ft lbf)	Molykote®
20	0686371805	Plug	20 Nm (15 ft lbf)	
23	3315366000	Valve	27 Nm (20 ft lbf)	
27	—	Valve	80 Nm (59 ft lbf)	
36	—	Pipe Coupling	315 Nm (232 ft lbf)	
42	3360433774	Grease Nipple	30 Nm (22 ft lbf)	
44	—	Restrictor	80 Nm (59 ft lbf)	
56	0147155503	Screw, Hex Head	315 Nm (232 ft lbf)	Molykote®
58	—	Check Valve	30 Nm (22 ft lbf)	LOCTITE® 243™
63	—	Nut	400 Nm (295 ft lbf)	Molykote®
64	0211110495	Hex Socket Screw	615 Nm (454 ft lbf)	Molykote®