SERVICE KIT

Accumulator Repair Kit

Numbers match the callouts in the drawing and on the breaker parts diagram.

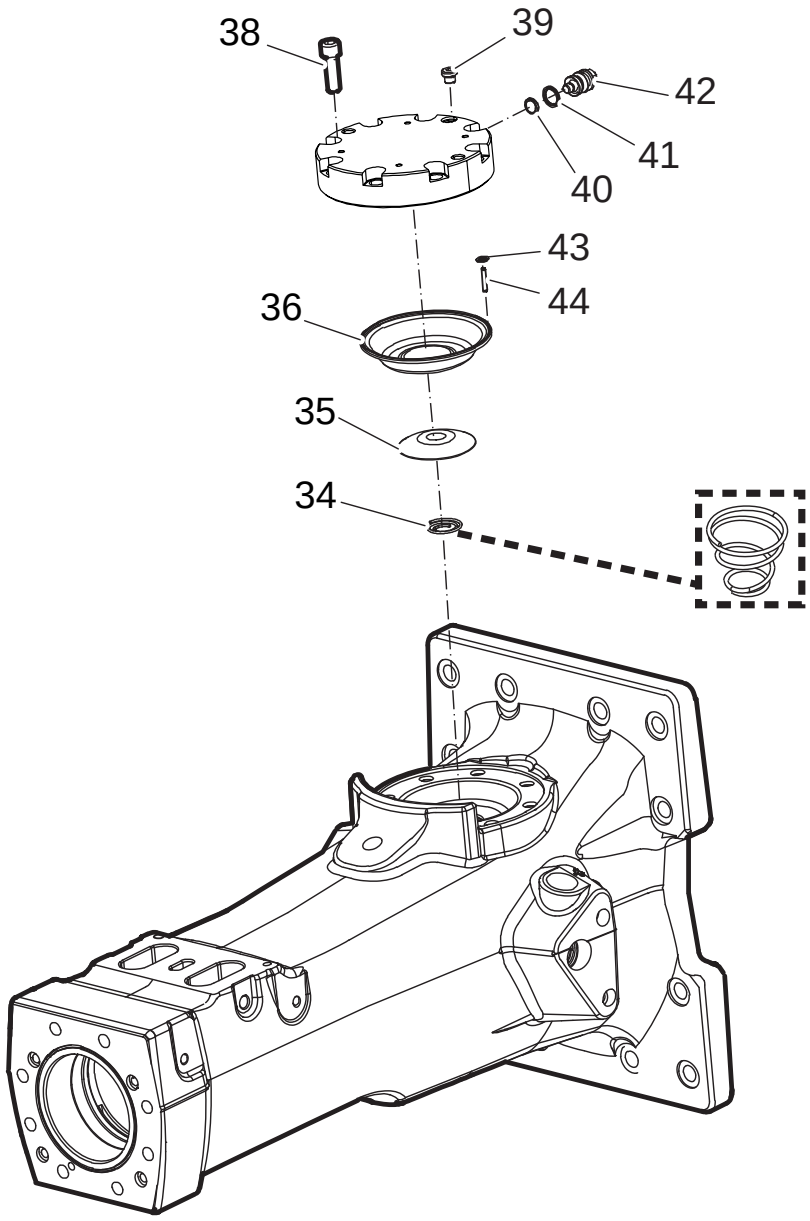

Accumulator Repair Kit Epiroc part number **3315409709** Crowder SKU EP-3315409709

Kit contents

REF	PART NO.	DESCRIPTION	QTY	NOTES
34	3315303500	Coil Spring	1	
35	3315388500	Diaphragm Support	1	For diaghragm
36	3315416300	Diaphragm	1	
38	0211196544	Hex Socket Screw	8	Screw with extra high fatigue strength.
39	0686371805	Plug	1	

REF	PART NO.	DESCRIPTION	QTY	NOTES
40	3115329002	Seal Ring	1	
41	0663212000	O-Ring	1	
42	3315366000	Valve	1	
43	0663211400	O-Ring	1	
44	0101414000	Pin	1	