OPTIONAL PARTS

Oversize bushings

Oversize bushings for worn breaker bodies.

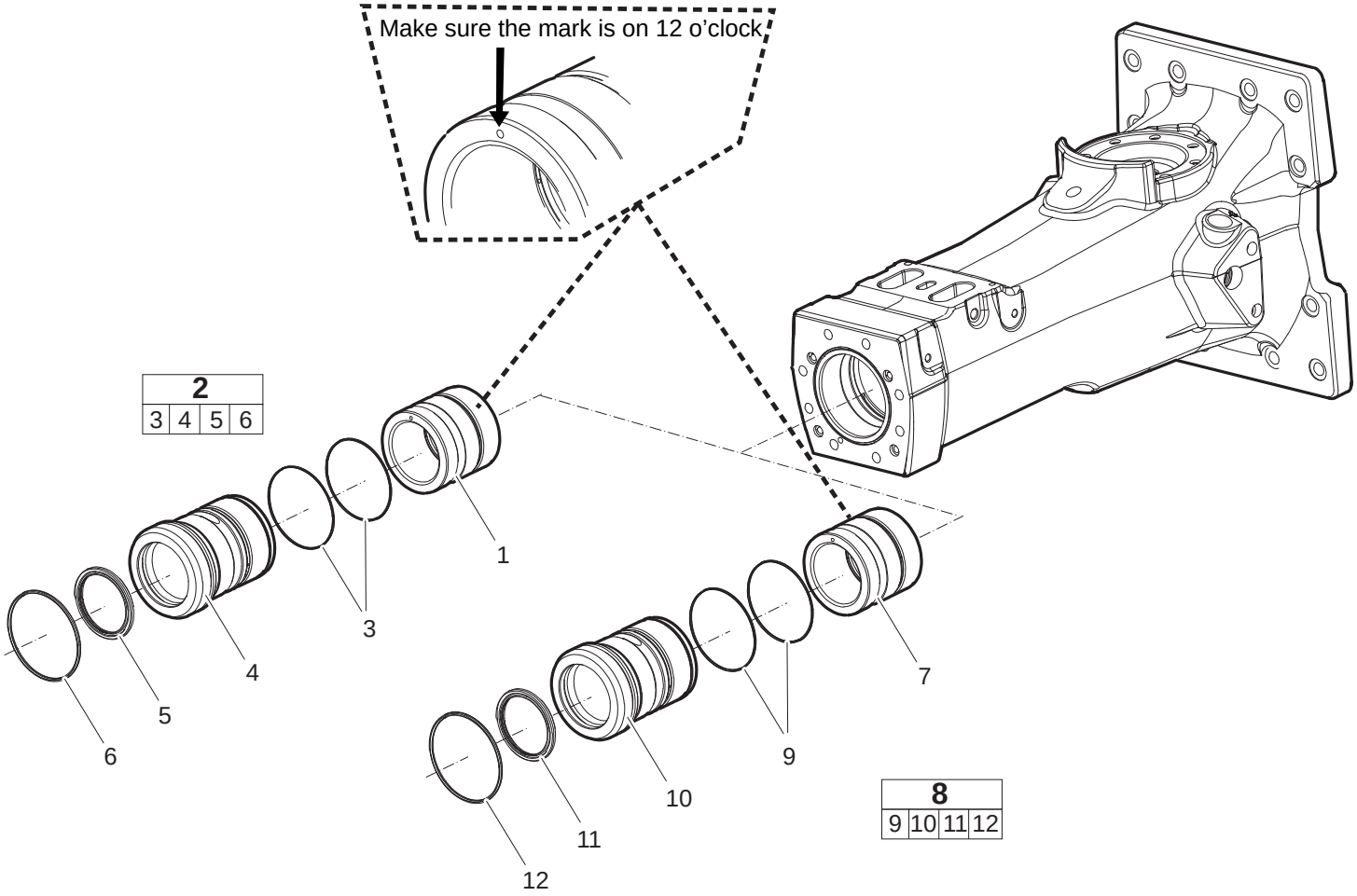

Parts list

REF	PART NO.	DESCRIPTION	QTY	NOTES
1	3315395015	Wear Bushing	1	Ø 145.5 mm (ø 5.75 in.)
2	3315301960	Bushing	1	Complete; includes 3, 4, 5 and 6
3	0663210824	O-Ring	2	
4	—	Wear Bushing	1	Not sold separately; part of 2. Ø 146 mm (ø 5.73 in.)
5	3315388700	Scraper Ring	1	
6	0663210658	O-Ring	1	

REF	PART NO.	DESCRIPTION	QTY	NOTES
7	3315395030	Wear Bushing	1	Ø 147 mm (ø 5.81 in.)
8	3315394763	Wear Bushing	1	Complete; includes 9, 10, 11 and 12
9	0663210824	O-Ring	2	
10	—	Wear Bushing	1	Not sold separately; part of 8. Ø 147.5 mm (ø 5.79 in.)
11	3315388700	Scraper Ring	1	
12	0663210658	O-Ring	1	