SERVICE KIT

Label Kit

Numbers match the callouts in the drawing and on the breaker parts diagram.

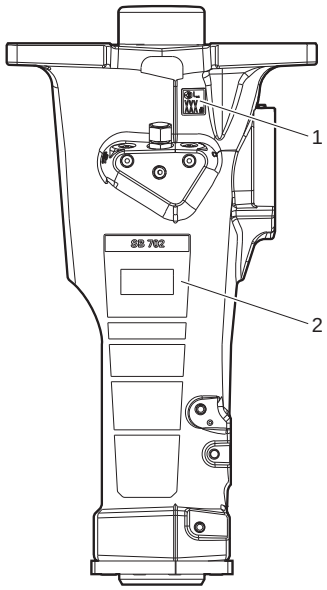

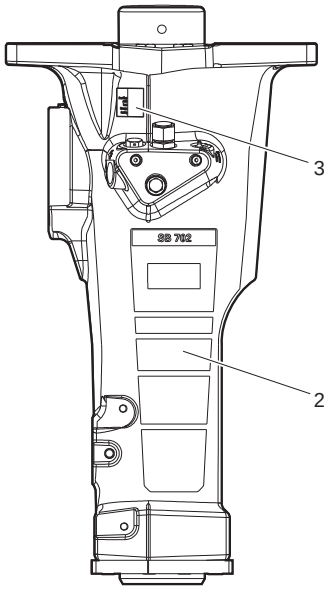

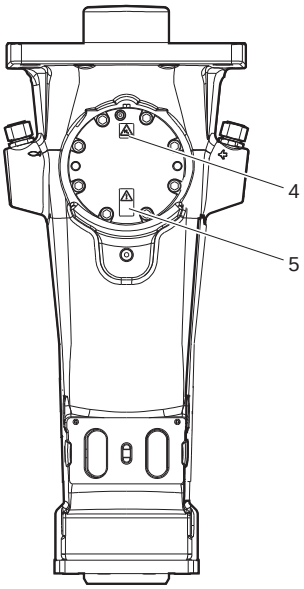

Label Kit Epiroc part number **3315409701** Crowder SKU EP-3315409701

Kit contents

REF	PART NO.	DESCRIPTION	QTY	NOTES
1	—	Label	1	Not sold separately. Sound power
2	—	Product Label	2	Not sold separately
3	—	AEM Sign	1	Not sold separately
4	—	Safety Label	1	Not sold separately
5	—	Safety Label	1	Not sold separately