SERVICE KIT

Lower Hammer Part Kit

Numbers match the callouts in the drawing and on the breaker parts diagram.

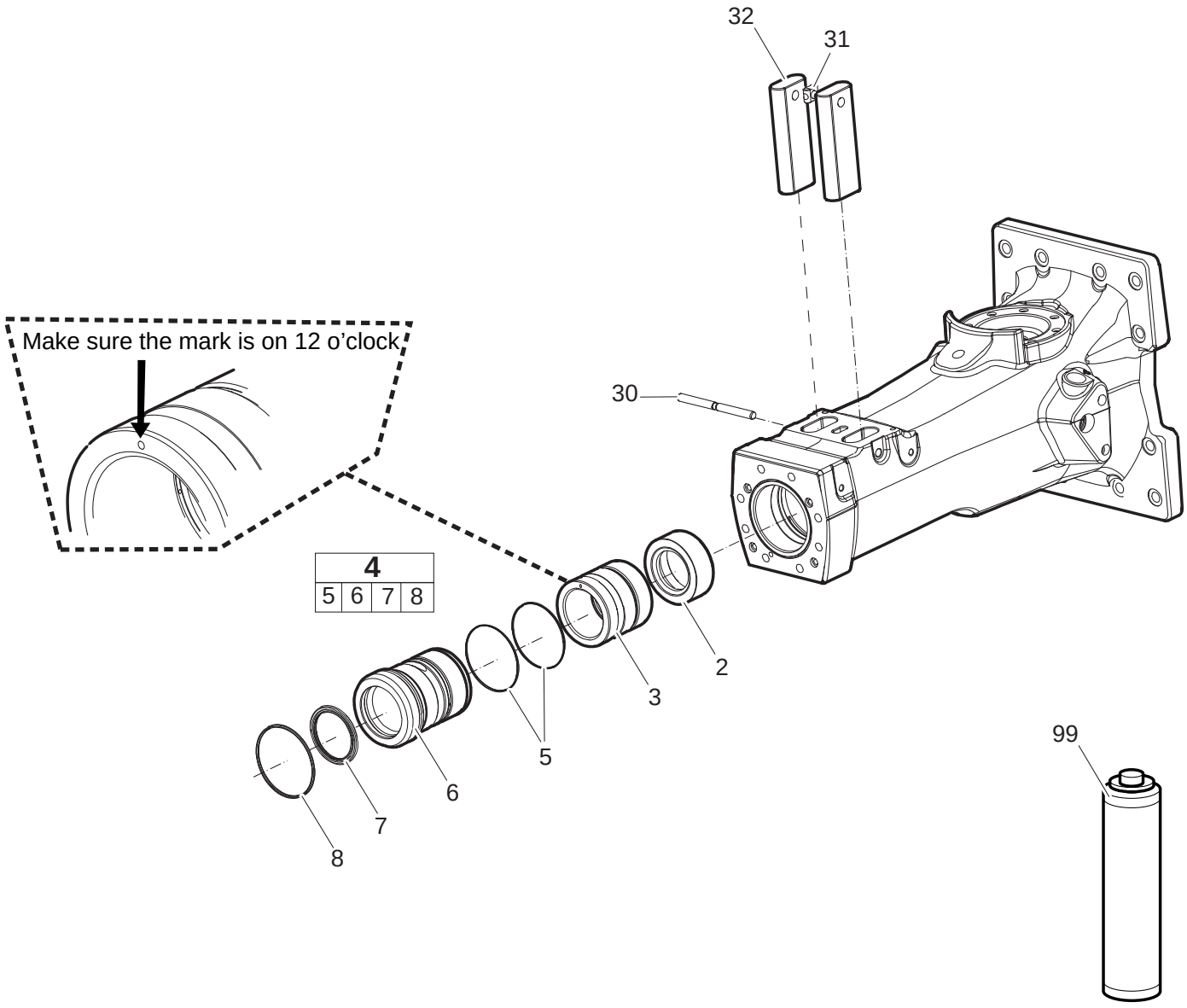

Lower Hammer Part Kit Epiroc part number **3315409708** Crowder SKU EP-3315409708

Kit contents

REF	PART NO.	DESCRIPTION	QTY	NOTES
2	3315388200	Stop Ring	1	
3	3315395000	Wear Bushing	1	
4	3315409707	Wear Bushing	1	Complete; includes 5, 6, 7 and 8
5	0663210824	O-Ring	2	
6	—	Wear Bushing	1	Not sold separately; part of 4
7	3315388700	Scraper Ring	1	
8	0663210658	O-Ring	1	
30	3315397200	Locking Pin	1	
31	3315141900	Lock Buffer	1	
32	3315388300	Retainer Bar	2	
99	—	Chisel Paste	1	Not sold separately. Bio, cartridge 1 x 400 g (0.88 lbs)