OPTIONS AND ACCESSORIES

Optional equipment

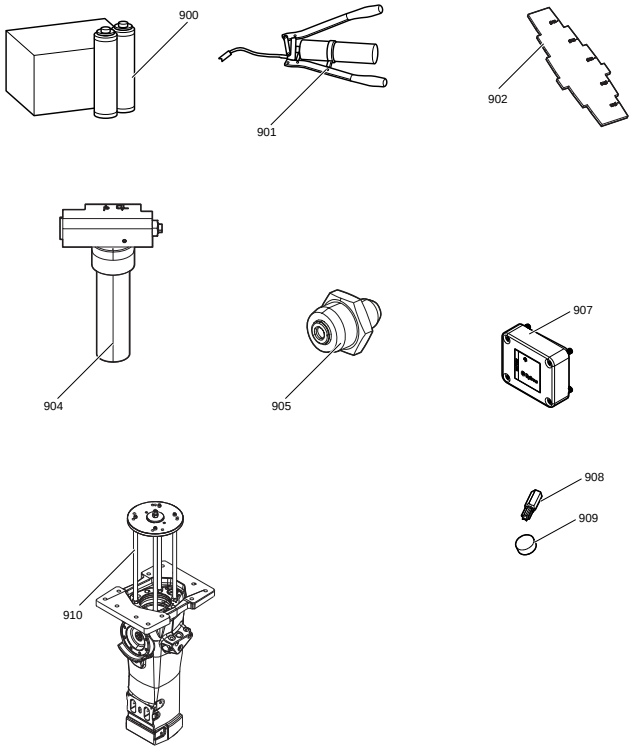

Parts list

REF	PART NO.	DESCRIPTION	QTY	NOTES
900	3363122355	Chisel Paste	1	Bio, for grease gun 12 x 400 g (0.88 lbs)
900	3363122356	Chisel Paste	1	Bio, cartridge 12 x 550 g (1.2 lbs)
900	3363091200	Chisel Paste	1	Cartridge 12 x 500 g (1.1 lbs)
	3363122357	Chisel Paste	1	Bio, container 15 kg (33 lbs)
	3363122358	Chisel Paste	1	Bio, container 45 kg (99 lbs)
	3363094669	Filling Device	1	For 500 g (1.1 lbs) cartridge in combination with 15 kg (33 lb) container
	3363066411	Filling Device	1	For 500 g (1.1 lbs) cartridge in combination with 45 kg (99 lb) container
	3363066412	Filling Adapter	1	For 500 g (1.1 lbs) cartridge in combination with 15 kg (33 lb) and 45 kg (99 lb) container
901	0909107100	Lubrication Gun	1	
902	3315409200	Wear Controller	1	For bushing
904	3363067123	ContiLube II Automatic Lubrication System	1	
905	3363094459	Nipple	1	For charging the accumulator
	3360920415	Filling Device	1	For accumulator
	3361329803	Filling Hose	1	For charging the accumulator
907	3315442523	HATCON Kit 4	1	LTE
908	3315439105	Security Bit	1	HATCON
909	3315439106	Magnet	1	HATCON
910	—	Service Tool	1	Not sold separately. For liner
	3315395200	Water Nozzle	4	
	3363067493	Adapter Kit	1	Universal