OPTIONAL PARTS

Restrictors

Alternative restrictor sizes for different carrier oil flows.

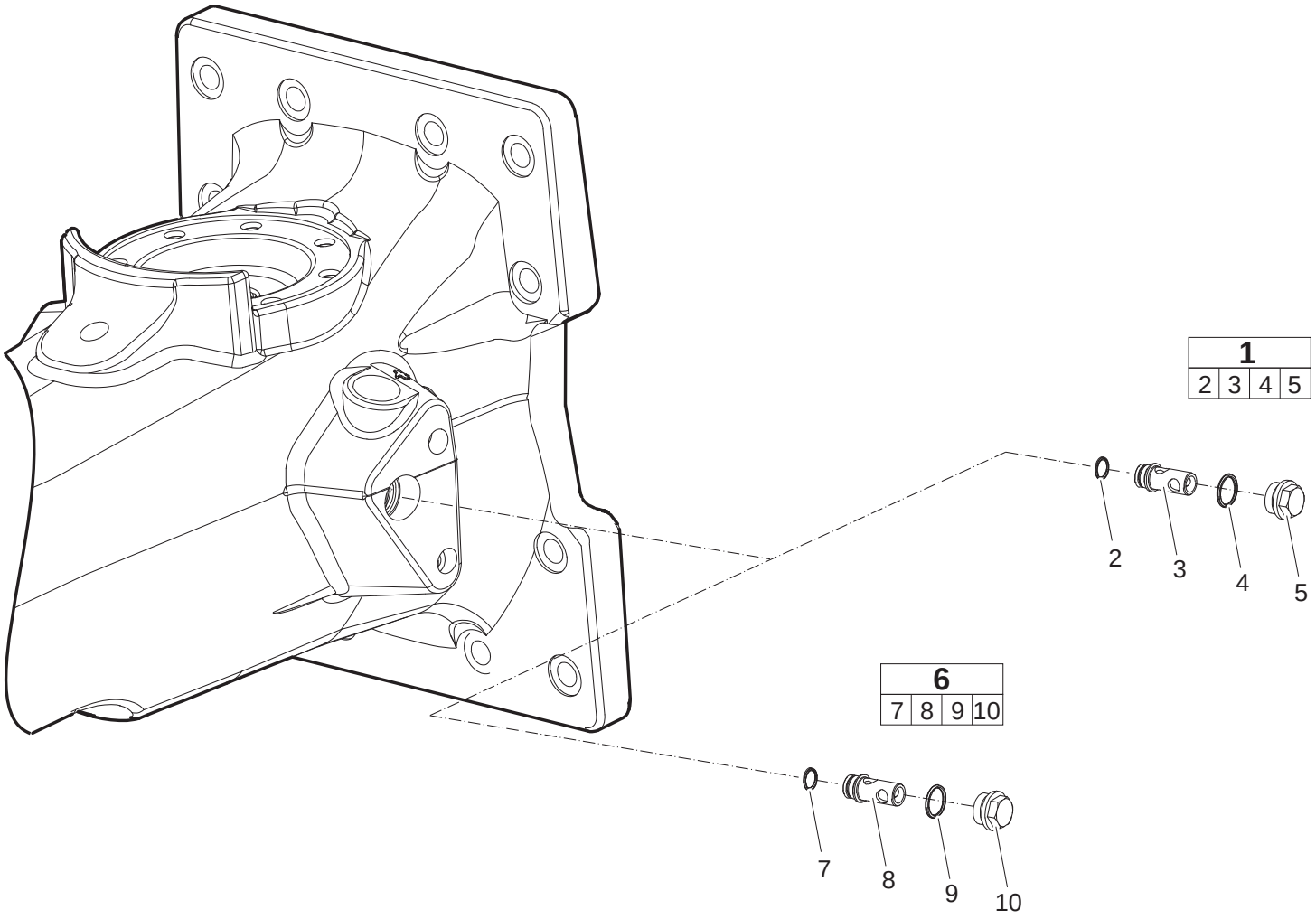

Parts list

REF	PART NO.	DESCRIPTION	QTY	NOTES
1	3315409704	Restrictor	1	Complete; includes 2, 3, 4 and 5
2	0663903201	O-Ring	1	
3	—	Restrictor	1	Not sold separately; part of 1. Ø 7.0 mm (Ø 0.28 in.)
4	0663910401	O-Ring	1	
5	3315386500	Restrictor Plug	1	

REF	PART NO.	DESCRIPTION	QTY	NOTES
6	3315409705	Restrictor	1	Complete; includes 7, 8, 9 and 10
7	0663903201	O-Ring	1	
8	—	Restrictor	1	Not sold separately; part of 6. Ø 7.6 mm (Ø 0.30 in.)
9	0663910401	O-Ring	1	
10	3315386500	Restrictor Plug	1	