SERVICE KIT

Seal Kit

Numbers match the callouts in the drawing and on the breaker parts diagram.

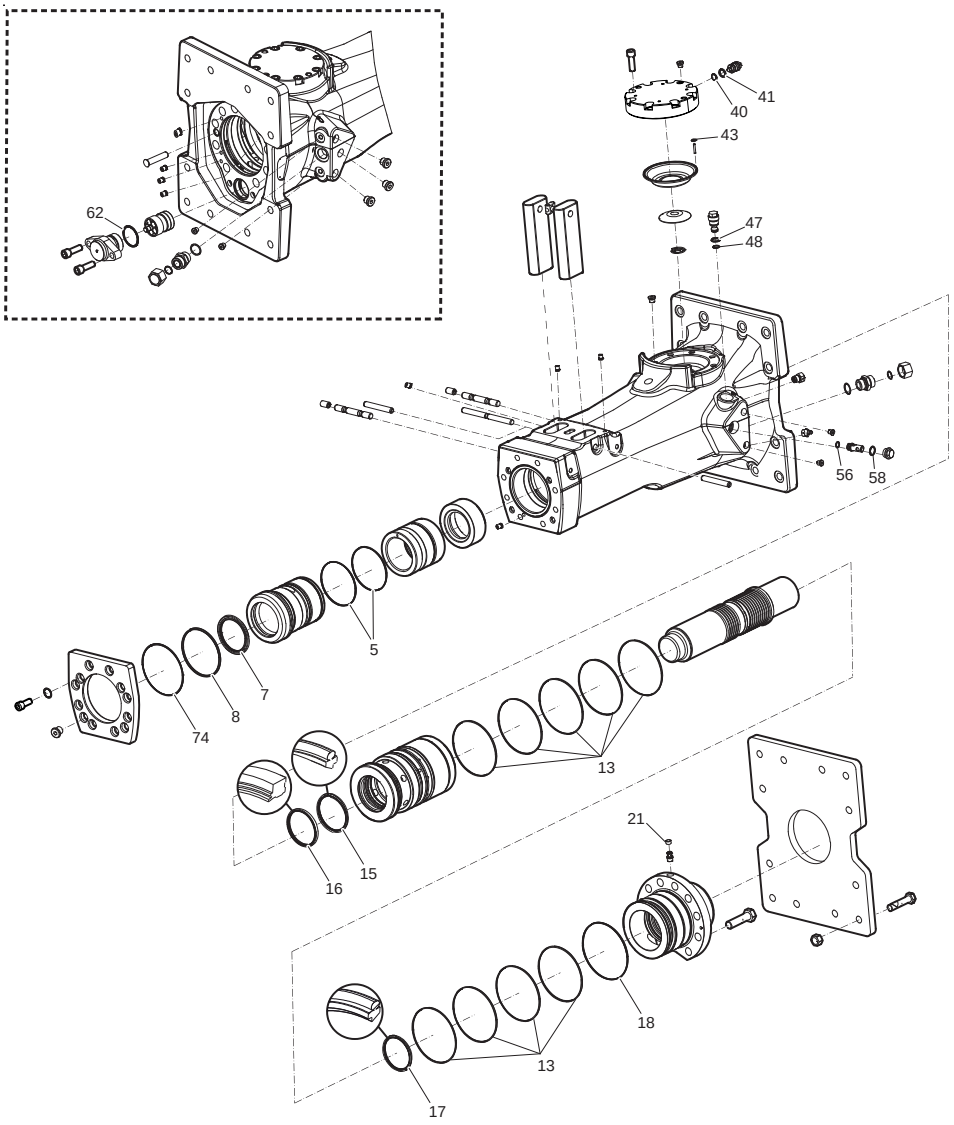

Seal Kit Epiroc part number **3315409702** Crowder SKU EP-3315409702

Kit contents

REF	PART NO.	DESCRIPTION	QTY	NOTES
5	0663210824	O-Ring	2	
7	3315388700	Scraper Ring	1	
8	0663210658	O-Ring	1	
13	0663990040	O-Ring	9	
15	0665070158	Piston Rod Seal	1	
16	0665909955	Wiper	1	
17	0665070157	Piston Rod Seal	1	
18	0663211649	O-Ring	1	
21	3315280800	Valve Rubber	1	

REF	PART NO.	DESCRIPTION	QTY	NOTES
40	3115329002	Seal Ring	1	
41	0663212000	O-Ring	1	
43	0663211400	O-Ring	1	
47	0663910401	O-Ring	1	
48	0663903201	O-Ring	1	
56	0663903201	O-Ring	1	
58	0663910401	O-Ring	1	
62	0663990041	Seal Ring	1	
74	0663211647	O-Ring	1	