SERVICE DATA

Tightening torques

Ref numbers match the drawing.

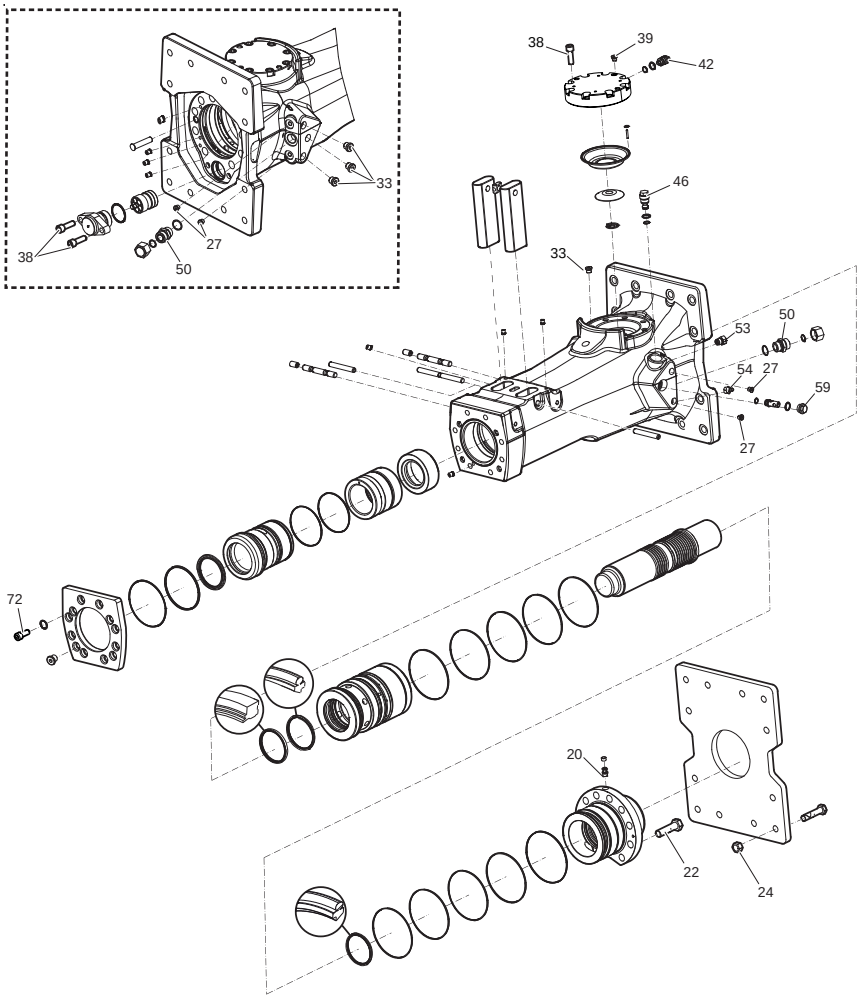

Tightening torques

REF	PART NO.	DESCRIPTION	TORQUE	NOTES
20	—	Check Valve	30 Nm (22 ft lbf)	LOCTITE® 243™
22	0147163803	Screw, Hex Head	550 Nm (406 ft lbf)	Molykote®
24	—	Nut	400 Nm (295 ft lbf)	Molykote®
27	0686644207	Plug	30 Nm (22 ft lbf)	LOCTITE® 243™
33	0686371801	Plug	80 Nm (59 ft lbf)	LOCTITE® 243™
38	0211196544	Hex Socket Screw	300 Nm (221 ft lbf)	Molykote®
39	0686371805	Plug	20 Nm (15 ft lbf)	
42	3315366000	Valve	27 Nm (20 ft lbf)	
46	—	Valve	80 Nm (59 ft lbf)	
50	0580001476	Pipe Coupling	315 Nm (232 ft lbf)	
53	3363109435	Valve	200 Nm (148 ft lbf)	
54	3360433774	Grease Nipple	30 Nm (22 ft lbf)	
59	3315386500	Restrictor Plug	80 Nm (59 ft lbf)	
72	3315431101	Hex Socket Screw	180 Nm (133 ft lbf)	Molykote®