WORKING TOOLS

Working tools: ClassicLine

Sizes and weights are shown beside each tool in the drawing.

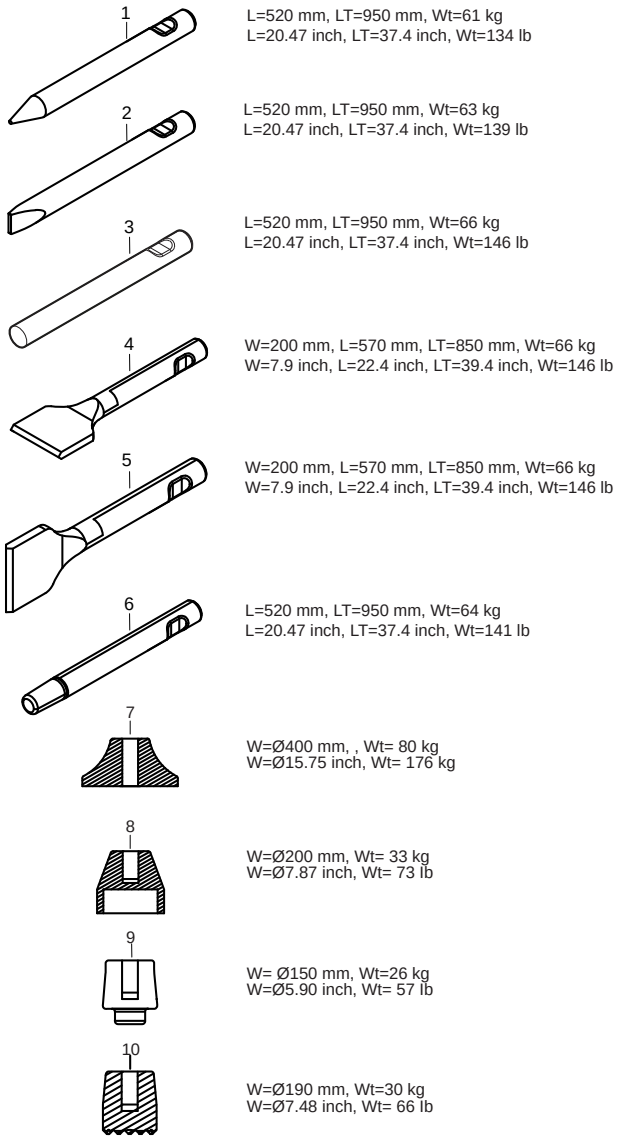

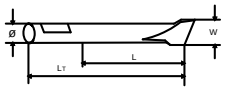

ClassicLine working tools

REF	PART NO.	DESCRIPTION	QTY	NOTES
1	3083342417	Moil Point	1	
2	3083342418	Chisel	1	Cross
3	3083342416	Blunt Tool	1	
4	3083340959	Wide Chisel	1	Cross
5	3083340960	Wide Chisel	1	Parallel
6	3083342419	Shaft	1	
7	3315371200	Tamping Pad	1	Square
8	3315372000	Post Driver Pad	1	Round
9	3315372600	Pile Driver Pad	1	Round
10	3315373200	Bushing Pad	1	Round

WORKING TOOLS

Working tools: ProLine

Sizes and weights are shown beside each tool in the drawing.

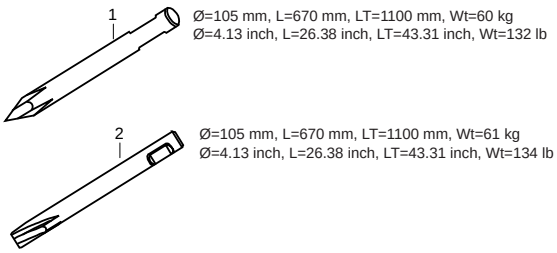

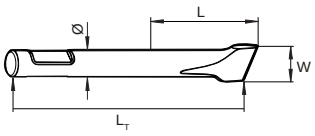

ProLine working tools

REF	PART NO.	DESCRIPTION	QTY	NOTES
1	3363120271	Moil Point	1	X-Profile
2	3363120272	Chisel	1	X-Profile