SERVICE DATA

Dimensions

Millimetres, with inches in brackets where shown.

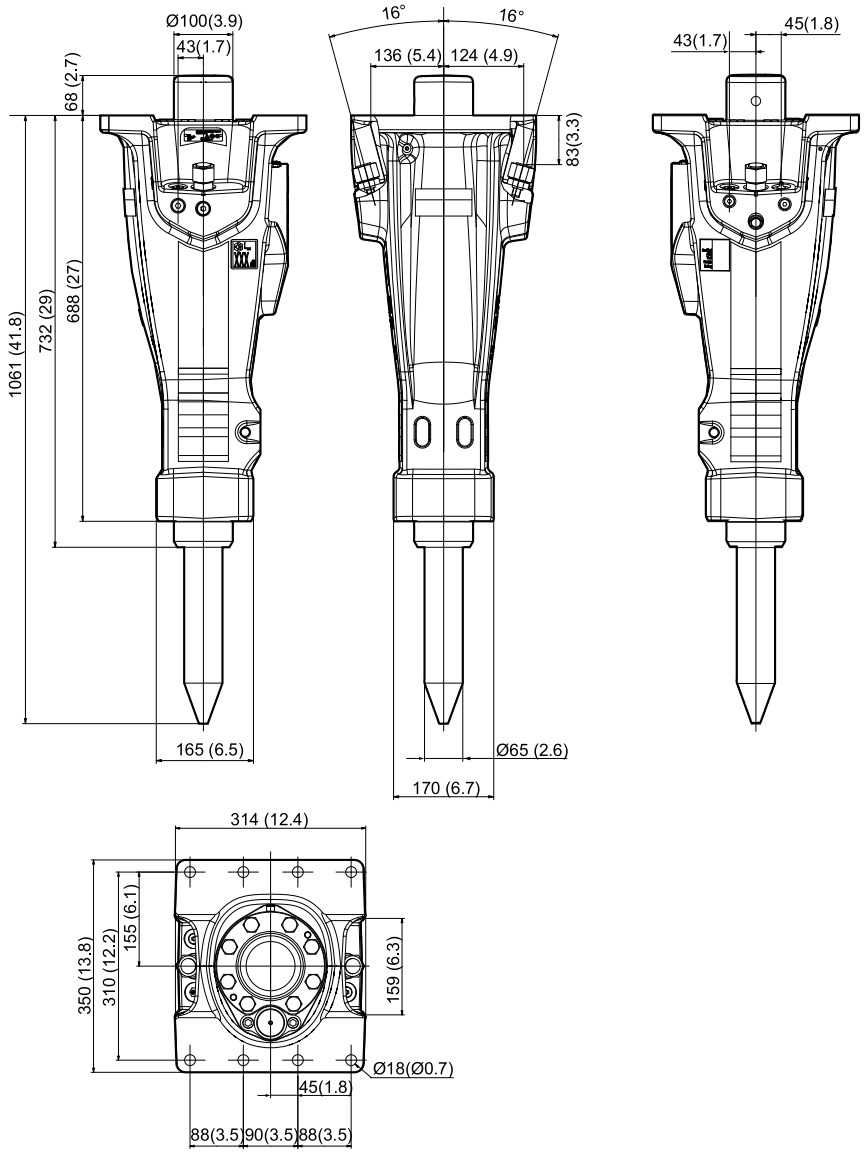

xxxx xxxx xx_xx

Scale xx%