OPTIONAL PARTS

Restrictors

Alternative restrictor sizes for different carrier oil flows.

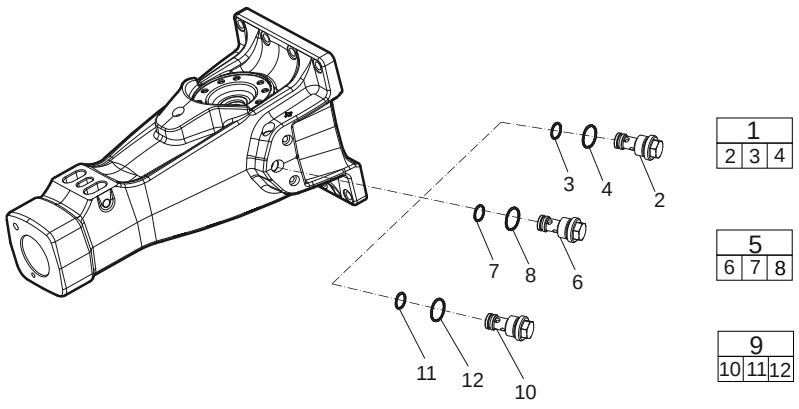

Parts list

REF	PART NO.	DESCRIPTION	QTY	NOTES
1	3315369540	Restrictor	1	Complete; includes 2, 3 and 4
2	—	Restrictor	1	Not sold separately; part of 1. Ø 4.0 mm (Ø 0.16 in.)
3	0663903201	O-Ring	1	
4	0663905401	O-Ring	1	
5	3315369535	Restrictor	1	Complete; includes 6, 7 and 8
6	—	Restrictor	1	Not sold separately; part of 5. Ø 4.5 mm (Ø 0.18 in.)
7	0663903201	O-Ring	1	
8	0663905401	O-Ring	1	
9	3315369555	Restrictor	1	Complete; includes 10, 11 and 12
10	—	Restrictor	1	Not sold separately; part of 9. Ø 6.7 mm (Ø 0.26 in.)
11	0663903201	O-Ring	1	
12	0663905401	O-Ring	1	