SERVICE KIT

Seal Kit

Numbers match the callouts in the drawing and on the breaker parts diagram.

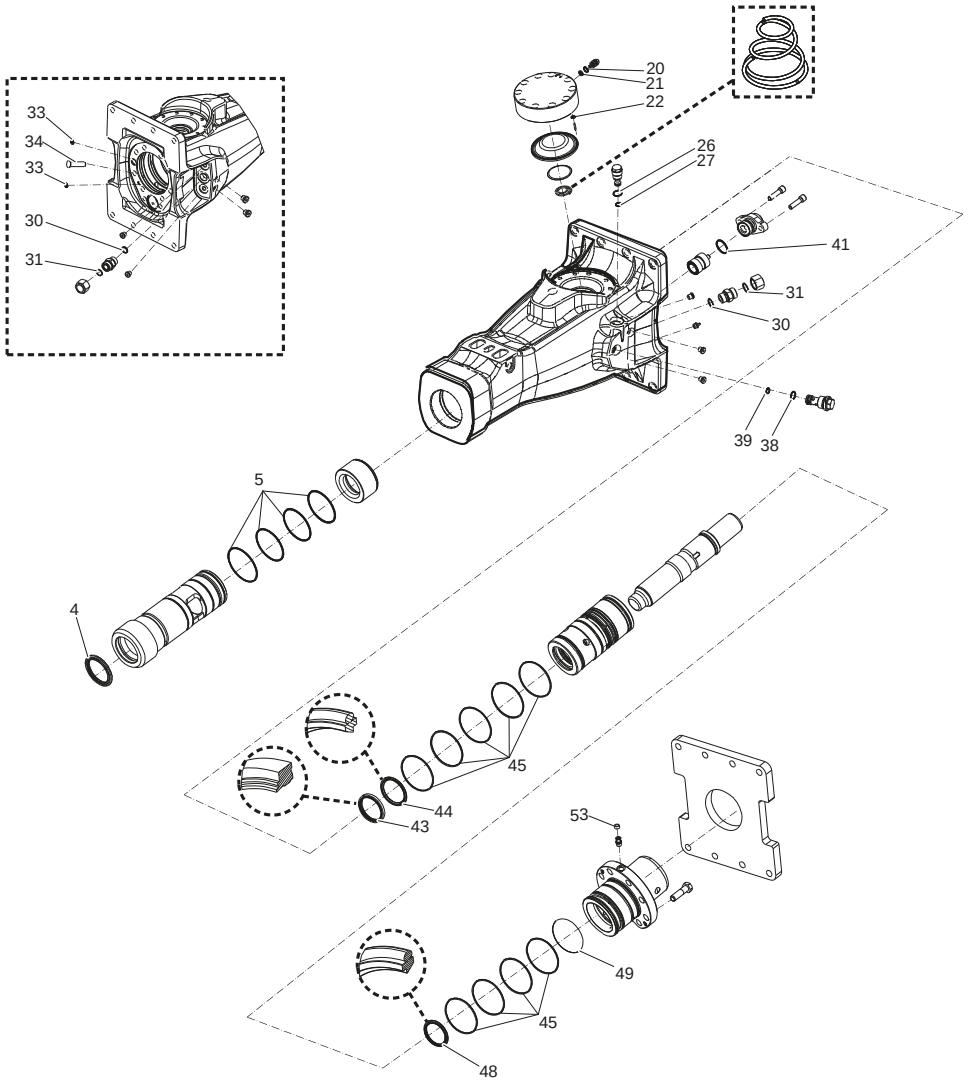

Seal Kit Epiroc part number **3315359090** Crowder SKU EP-3315359090

Kit contents

REF	PART NO.	DESCRIPTION	QTY	NOTES
5	3315356200	Scraper Ring	1	
5	0663210498	O-Ring	4	
20	0663212000	O-Ring	1	
21	3115329002	Seal Ring	1	
22	0663211400	O-Ring	1	
26	0663903201	O-Ring	1	
27	0663905401	O-Ring	1	
30	0664000004	Seal Ring	2	
31	0663210217	O-Ring	2	
33	0665090014	Seal Ring	2	

REF	PART NO.	DESCRIPTION	QTY	NOTES
34	3315301100	Plug	1	
38	0663903201	O-Ring	1	
39	0663905401	O-Ring	1	
41	0663990033	Seal	1	
43	0665909956	Wiper	1	
44	0665070130	Piston Rod Seal	1	
45	0663990036	Seal Ring	9	
48	0665070129	Piston Rod Seal	1	
49	0663211516	O-Ring	1	
53	3315280800	Valve Rubber	1	