SERVICE DATA

Tightening torques

Ref numbers match the drawing.

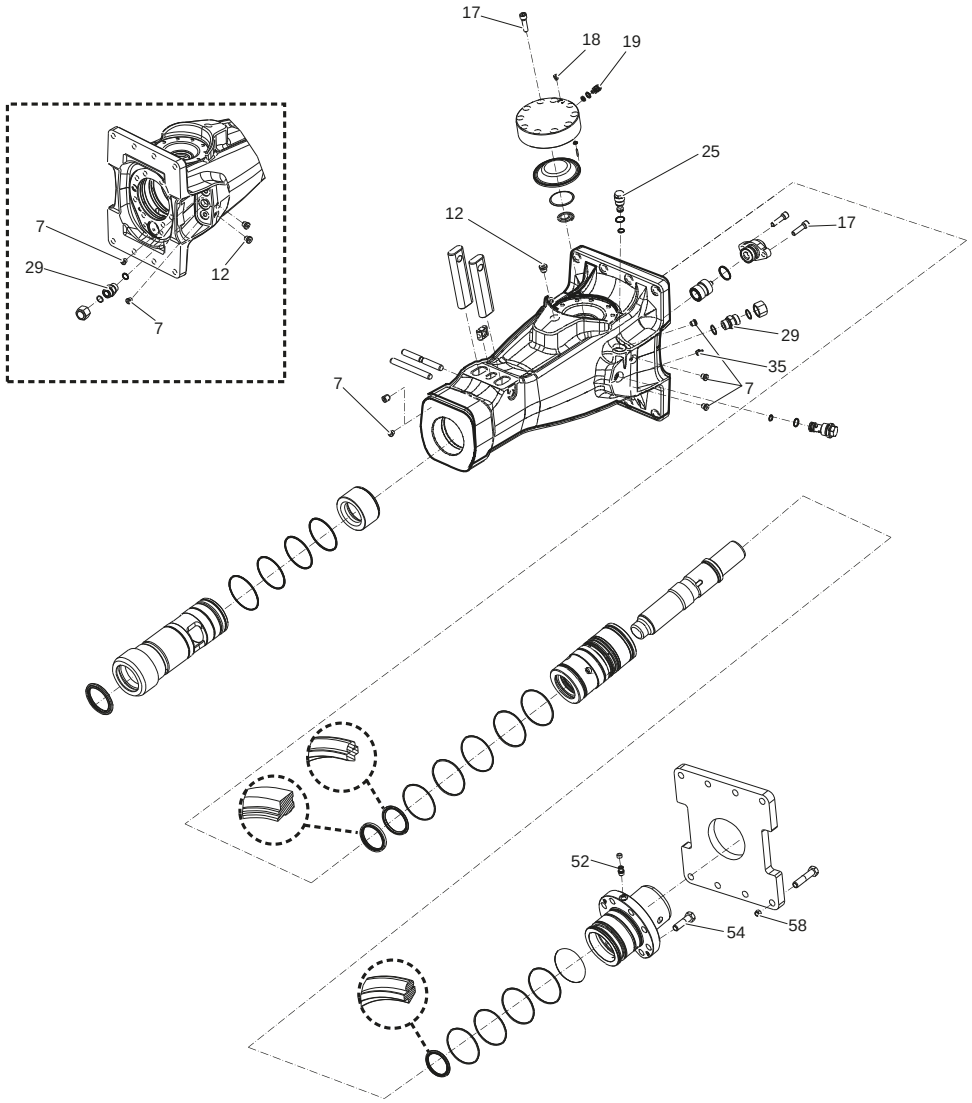

Tightening torques

REF	PART NO.	DESCRIPTION	TORQUE	NOTES
7	0686644207	Plug	30 Nm (22 ft lbf)	LOCTITE® 243™
12	0686371801	Plug	80 Nm (59 ft lbf)	LOCTITE® 243™
17	0211196534	Hex Socket Screw	120 Nm (89 ft lbf)	Molykote®
18	0686371805	Plug	27 Nm (20 ft lbf)	
19	3315366000	Valve	20 Nm (15 ft lbf)	
25	—	Valve	60 Nm (44 ft lbf)	
29	—	Nipple	120 Nm (89 ft lbf)	
35	3360433774	Grease Nipple	30 Nm (22 ft lbf)	
52	—	Check Valve	30 Nm (22 ft lbf)	LOCTITE® 243™
54	—	Hex Head Screw	180 Nm (133 ft lbf)	Molykote®
58	—	Nut	170 Nm (125 ft lbf)	