WORKING TOOLS

Working tools: ClassicLine

Sizes and weights are shown beside each tool in the drawing.

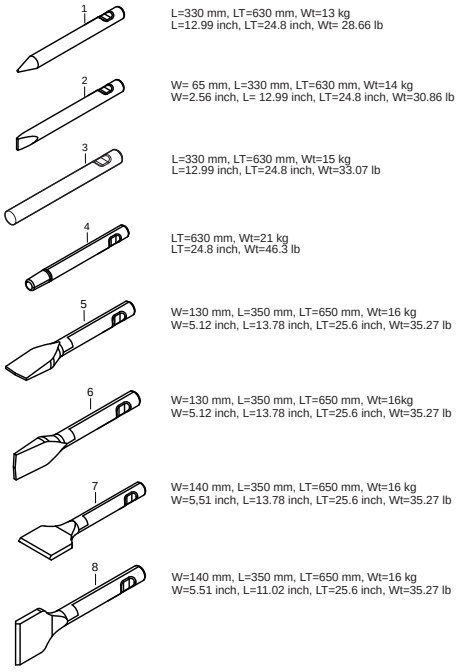

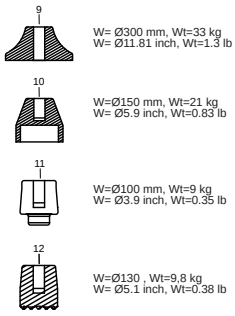

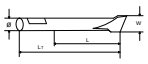

ClassicLine working tools

REF	PART NO.	DESCRIPTION	QTY	NOTES
1	3083316206	Moil Point	1	
2	3083316105	Chisel	1	Cross
3	3083341105	Blunt Tool	1	
4	3315370205	Shaft	1	
5	3083316300	Wide Chisel	1	Cross
6	3083316700	Wide Chisel	1	Parallel
7	3083340946	Asphalt Cutter	1	Cross
8	3083340947	Asphalt Cutter	1	Parallel
9	3315370900	Tamping Pad	1	Square
10	3315371700	Post Driver Pad	1	Round
11	3315372300	Pile Driver Pad	1	Round
12	3315373000	Bushing Pad	1	Round

WORKING TOOLS

Working tools: ProLine

Sizes and weights are shown beside each tool in the drawing.

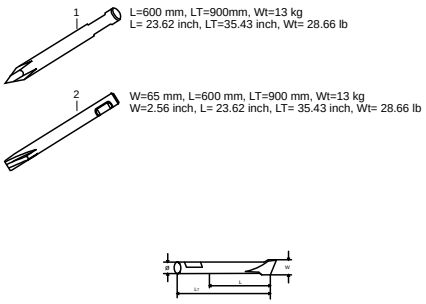

ProLine working tools

REF	PART NO.	DESCRIPTION	QTY	NOTES
1	3363120263	Moil Point	1	X-profile
2	3363120264	Chisel	1	X-profile